STUF-BSP

Valvole di controllo flusso unidirezionali
Unidirectional flow control valves

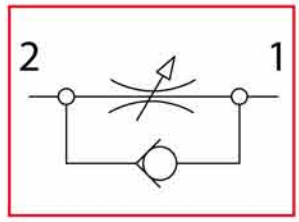

Dati tecnici
Technical data

Viscosità fluido *Fluid viscosity*	10-500 mm^2/s *45 to 2000 ssu (6 to 420 cSt)*
Classe di contaminazione *Filtration*	ISO code 16/13 *SAE class 4 or better*
Temperatura fluido *Fluid temperature*	-20°C +80°C *-4°F + 176°F*
Temperatura ambiente *Ambient temperature*	-20°C +50°C *-4°F +122°F*

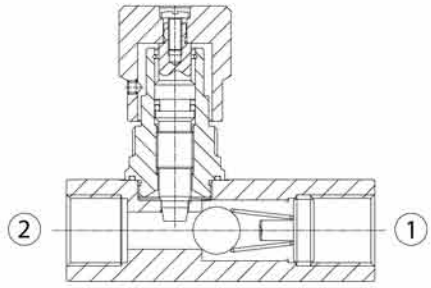

Perdite di carico
Pressure drops

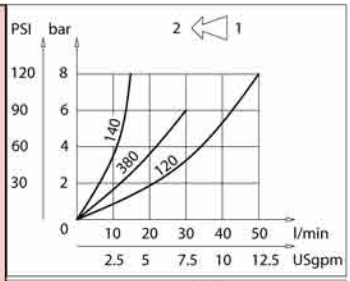

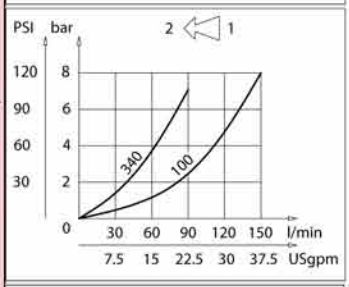

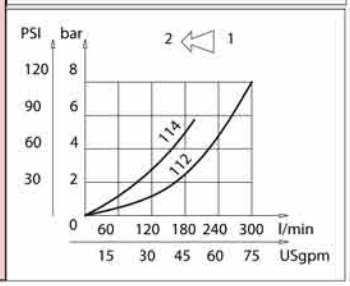

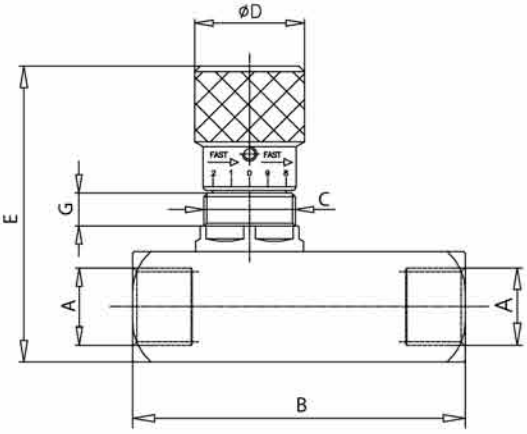

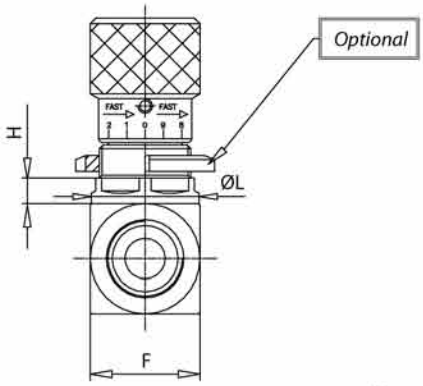

mm
(Inches)

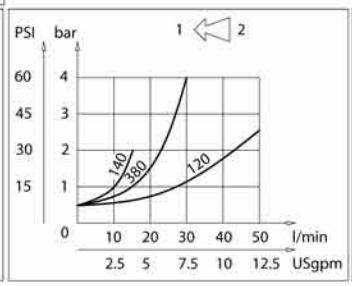

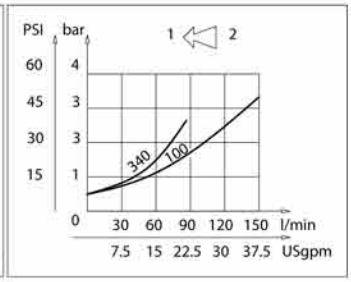

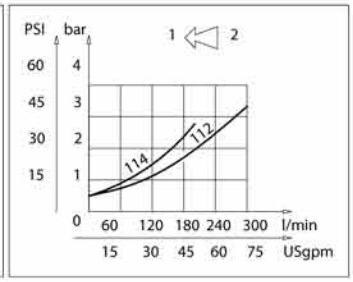

Caratteristiche tecniche
Technical performances

Codice *Code*	A	Portata Max *Max flow* l/min - *USgpm*	Pressione Max *Max pressure* bar/*PSI*	B	C	D	E	F	G	H	L	Optional *Code*	Peso approssimativo *Approx weight* Kg / *lb*
STUF140	**BSPP 1/4**	**15** *(4)*	**400** *(5800)*	**66** *(2.60)*	**M20x1**	**30** *(1.18)*	**75** *(2.95)*	**25** *(0.98)*	**7,5** *(0.29)*	**6** *(0.23)*	**24,5** *(0.96)*	**84100022**	**0,38** *(0.84)*
STUF380	**BSPP 3/8**	**30** *(8)*		**77** *(3.03)*									**0,40** *(0.88)*
STUF120	**BSPP 1/2**	**50** *(13)*		**91** *(3.58)*	**M25x1,5**	**33** *(1.30)*	**81** *(3.19)*	**30** *(1.18)*	**9** *(0.35)*	**7** *(0.27)*	**29,5** *(1.16)*	**84100023**	**0,63** *(1.40)*
STUF340	**BSPP 3/4**	**80** *(21)*		**112,5** *(4.43)*	**M35x1,5**	**42** *(1.65)*	**110** *(4.33)*	**40** *(1.57)*	**15,5** *(0.61)*	**8** *(0.31)*	**39,5** *(1.55)*	**84100024**	**1,45** *(3.2)*
STUF100	**BSPP 1**	**150** *(40)*		**141** *(5.55)*			**115** *(4.53)*	**45** *(1.77)*					**2** *(4.4)*
STUF114	**BSPP 1-1/4**	**200** *(50)*	**300** *(4000)*	**155** *(6.10)*	**M45x1,5**	**53** *(2.08)*	**137** *(5.39)*	**55** *(2.16)*	**13,5** *(0.53)*	**10** *(0.39)*	**50** *(1.96)*	**84100030**	**3,3** *(7.25)*
STUF112	**BSPP 1-1/2**	**300** *(80)*		**168** *(6.61)*			**147** *(5.78)*	**65** *(2.55)*					**4,7** *(10.3)*

Codice ordinazione
Ordering code

STUF-X

X	Dimensione / *Size*
140	BSPP 1/4
380	BSPP 3/8
120	BSPP 1/2
340	BSPP 3/4
100	BSPP 1
114	BSPP 1-1/4
112	BSPP 1-1/2