PM 12-25 byB-AISI-316

with release hand knob
with pressure relief valve
double acting hand pump for single acting cylinder
for fixing to tank

hydraulic diagram

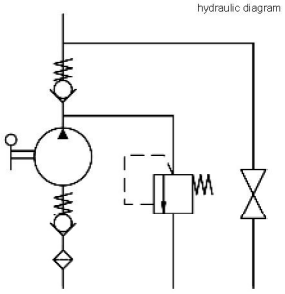

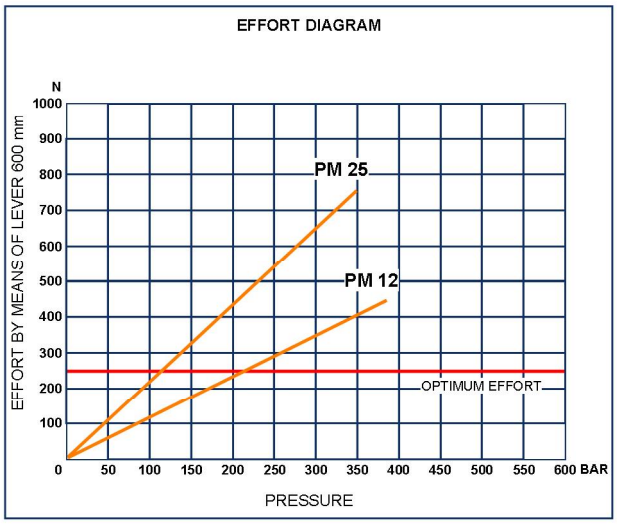

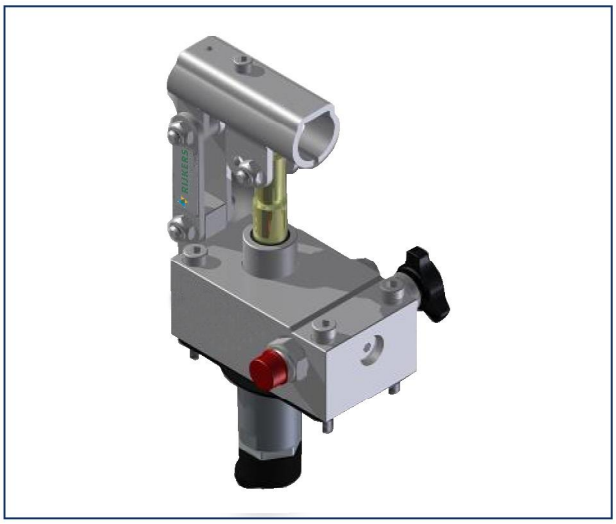

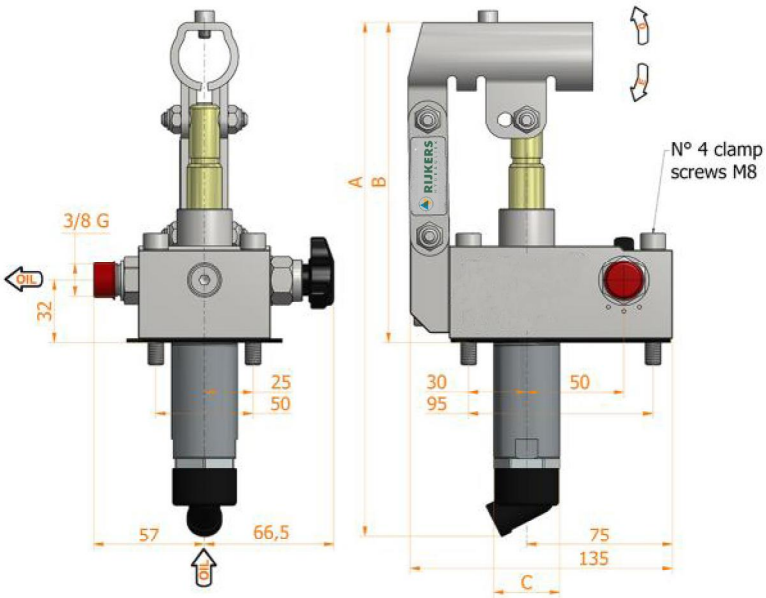

Specifications:

- Stainless steel AISI 316 pump body
- Stainless steel AISI 630 piston rod with Niploy coating (50 µm)
- Lever connection Ø 27
- Stainless steel AISI 316 external parts
- Oil tank mounting kit including
- Pressure relief valve standard setting: 100 bar
- Equipped with non return valve on the outlet port
- Triple sealing system made to prevent any oil leakage and sweating onto the piston rod

DISPLACEMENT cm³	A mm	B mm	C mm	D °	E °	ACTUAL DISPLACEMENT cm³	PRESSURE BAR		MASS KG	CODE	CODE WITH BELLOWS
							OPTIMAL	MAX			
12	253	166	34	26	31	12,095	220	380	4,200	6050.7000	
25	273	172	34	30	30	25,280	120	350	4,200	6051.7000	

PMD 12-25 byB-AISI-316

with 4/3 flow divider closed centre
with pressure relief valve
double acting hand pump for a double acting cylinder
for fixing to tank

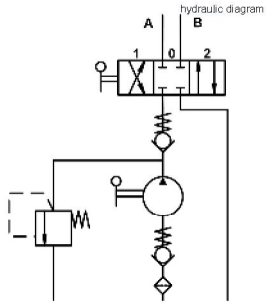

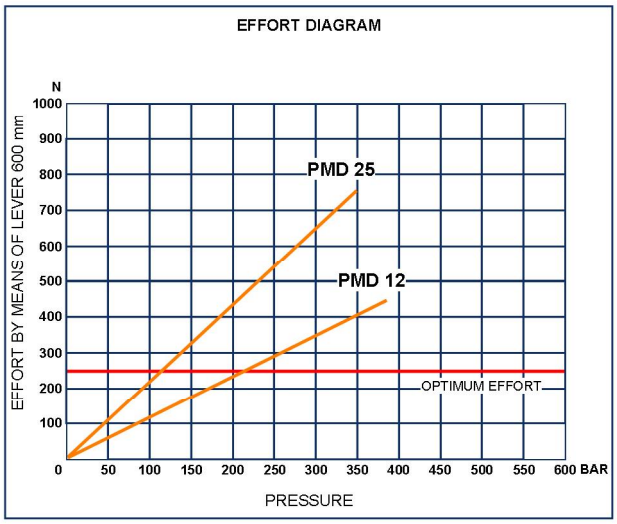

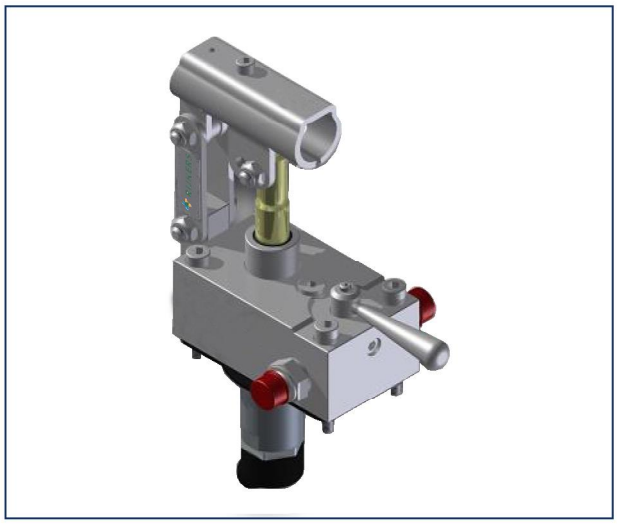

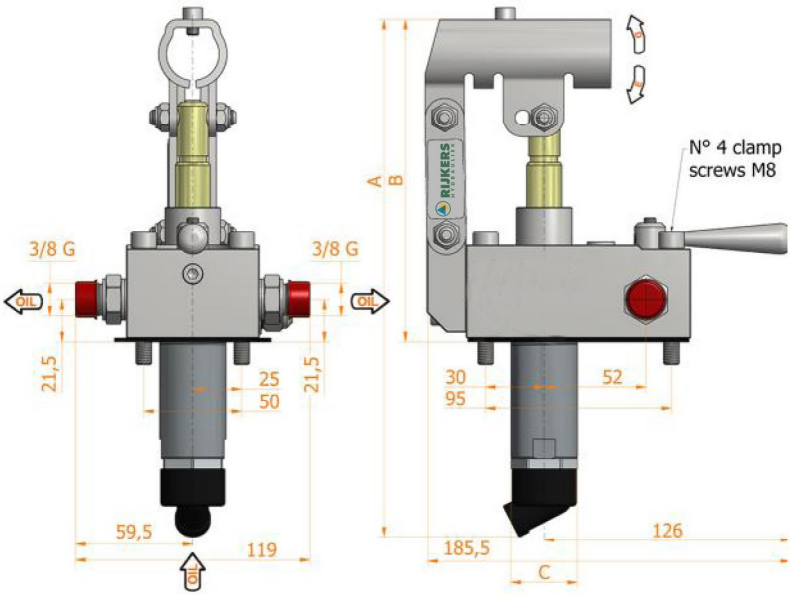

Specifications:

- Stainless steel AISI 316 pump body
- Stainless steel AISI 630 piston rod with Niploy coating (50 µm)
- Lever connection Ø 27
- Stainless steel AISI 316 external parts
- Oil tank mounting kit including
- Pressure relief valve standard setting: 100 bar
- Triple sealing system made to prevent any oil leakage and sweating onto the piston rod

DISPLACEMENT cm³	A mm	B mm	C mm	D °	E °	ACTUAL DISPLACEMENT cm³	PRESSURE BAR		MASS KG	CODE	CODE WITH BELLOWS
							OPTIMAL	MAX			
12	253	166	34	26	31	12,095	220	380	4,400	6055.7000	
25	273	172	34	30	30	25,280	120	350	4,400	6056.7000	